Cable drum lifting jacks

Drum shafts

Drum loading traverses

Vetter GmbH
Kabelverlegetechnik

Drum lifting jacks, mechanical up to 16 t drum weight

Drum lifting hydraulic jacks up to 55 t drum weight

Drum winding machines from 3-10 t

Drum shafts, supporting equipment and accessory

Drum loading and moving traverses from 3-21 t

Cable unwinding tools for in-house installation

Cable drum spindle jacks

Tripod cable drum spindle jacks, with crossbar captivated. Two required.

Below mentioned capacity is per pair. Two are required

Code	Type	Cap.	Drum-D	kg
310200	LQ 20/540	4 t	max. 1600 mm	12,10

Cable drum lifter

Cable drum lifter, easy to handle, with adjustable catching claws. Steel construction galvanized.

For one pair select one left-hand and one right-hand.

Code	Type	Design	SWL	Drum-D	kg
311100	TM 10L	Left-hand	1,0 t	500-1650 mm	14,00
311110	TM 10R	right-hand	1,0 t	500-1650 mm	14,00

Cable drum rack-and-pinion jacks

Cable drum rack-and-pinion jacks, with height adjustable side claws. Safety crank and 2 rubber wheels.

Below mentioned capacity is per pair. Two are required

Code	Type	Cap.	Drum-D	Base	Height min.	kg
311130	TZ 15	3 t	600-1750	500/330	805 mm	32,00
311220	TZ 30	6 t	800-2500	625/450	1045 mm	64,00
311250	TZ 50	10 t	1000-3200	625/450	1350 mm	87,00
311280	TZ 80	16 t	1000-3200	625/450	1400 mm	108,00

Cable drum hydraulic jacks

Cable drum hydraulic jacks, with height adjustable central claw and 2 rubber wheels. Steel construction galvanized.

Below mentioned capacity is per pair. Two are required

Code	Type	Cap.	Drum-D	Base	Height min.	Lift	kg
312130	TH 31	6 t	800-2500	500/430	1340 mm	150	54,00
312160	TH 61	12 t	900-3200	650/400	1660 mm	150	96,00
312200	TH 81	16 t	900-3200	650/400	1660 mm	150	99,00

Cable drum hydraulic jacks

Cable drum hydraulic jacks, with height adjustable central claw support for heaviest and biggest drums. Big triangular base. Steel construction hot galvanized.

Below mentioned capacity is per pair. Two are required

- Base and top telescope tube adjustable to drum sizes.
- Hydraulic lift by hand pump 150 mm
- THV 20/30 accessory, shaft closing clamp, if jacks are on soft grounds or on lorries or boats

Code	Type	Cap.	Drum-D	Triangle base	kg
312471	THD 20/25	40 t	1800-2500	1500/550	128,00
312500	THD 20/37	40 t	2500-3700	1500/550	140,00
312520	THD 20/42	40 t	3000-4200	1500/550	150,00
312521	THD 20/44	40 t	3200-4400	1500/550	155,00
312522	THD 20/46	40 t	3400-4600	1500/550	158,00
312544	THD 30/50	50 t	3600-5000	2000x1000	271,00
312561	THV 20/30	Closing clamp	--	--	2,30

Cable winding units stationary

Cable winding and unwinding stands, with hydraulic lift, stationary or for mounting on lorries, wagons etc. For drums up to 6 t. Incl. rotating drum shaft D 76 mm with drum fixing clamps.

Accessories are available like drum drives and drum brakes. Please ask for our more extensive offers.

Code	Type	Cap.	Drum-D	Int. /ext. width/length	kg
331442	KTU 3 LH	3 t	800-2800	1740/2000/2200 mm	470,00
331562	KTU 6 LH	6 t	800-3300	1740/2040/2600 mm	520,00
331563	KTU 6 LH	6 t	800-3300	1940/2240/2600 mm	540,00

Cable winding units stationary

Cable winding and unwinding stands, without hydraulic lift, stationary or for mounting on lorries, wagons etc. For drums up to 6 t. Incl. rotating drum shaft D 76 mm with drum fixing clamps.

Accessories are available like drum drives and drum brakes. Please ask for our more extensive offers.

Code	Type	Cap.	Drum-D	Int. /ext. width/length	kg
331454	KTU 3 LS	3 t	800-2800	1740/2000/2200 mm	390,00
331566	KTU 6 LS	6 t	800-3300	1740/2040/2600 mm	460,00
331567	KTU 6 LS	6 t	800-3300	1940/2240/2600 mm	500,00
331660	KTU 10 LS	10 t	800-3300	1940/2240/2600 mm	685,00

Retainer for fork lifts

Retainer for fork lifts for KTU 3-10 ST, LH and LS, not for FA. for loading the unloaded machines without a cable drum on lorries or wagons. Max. size of the fork arms 125x50 mm. Applicable from the front and the side part. This support can be mounted also as retrofitting part on all machines supplied after 01.08.2012.

Code	Type	Suitable to	kg
331458	GAB 3-ST	KTU 3 ST / LH / LS	64,00
331588	GAB 6-ST	KTU 6 ST / LH / LS	54,00
331718	GAB 10-ST	KTU 10 ST / LH / LS	60,00

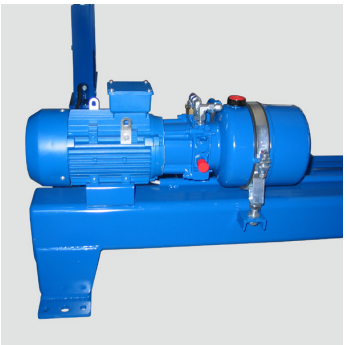

Hydraulic jack lifter

Hydraulic jack lifting device. Electro-hydraulic power pack, 3 kW/400V motor. Individual control of the lifting jacks. Only for initial configuration, not for retrofitting.

Code	Type	Suitable for	kg
333287	HAE 310	KTU 3-10 without drum drive	24,00
333288	HAE 311	KTU 3-10 with drum drive TEE	24,00

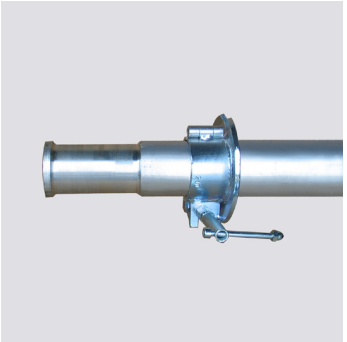

Solid alu drum shafts, rigid

Cable drum shafts rigid, solid alu with recessed ends and 2 clamps

Code	Type	D/L mm	Bearing seat	SWL	kg
314150	KAV 7519	75/1900	D 66x115 mm	to 5,6 t	25,00
314190	KAV 7521	75/2100	D 66x115 mm	to 4,4 t	27,50

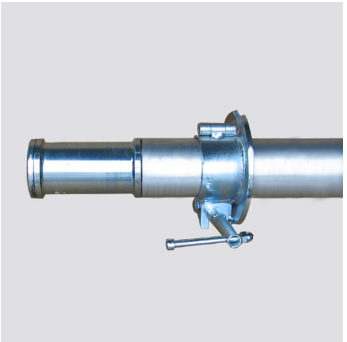

Solid alu drum shafts, rotating

Cable drum shafts rotating, solid alu with bearings and recessed ends and 2 clamps

Code	Type	D/L mm	Bearing seat	SWL	kg
314600	KAD 7519	75/1900	D 66x115 mm	to 5,0 t	29,00
314640	KAD 7521	75/2100	D 66x115 mm	to 4,4 t	31,30

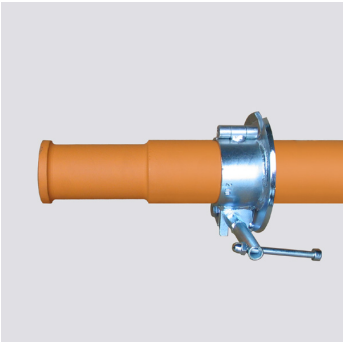

Tubular steel drum shafts, rigid

Cable drum shafts rigid, tubular steel with recessed ends and 2 clamps

Code	Type	D/L mm	Bearing seat	SWL	kg
314300	KSR 5110	51/1500	D 43x115 mm	to 2,5 t	15,00
314340	KSR 7610	76/1850	D 66x115 mm	to 6,6 t	30,80
314380	KSR 7614	76/2000	D 66x115 mm	to 8,0 t	41,80
314430	KSR 8917	89/2200	D 78x115 mm	to 13,0 t	67,00
314460	KSR 9517	95/2200	D 85x115 mm	to 15,4 t	75,00

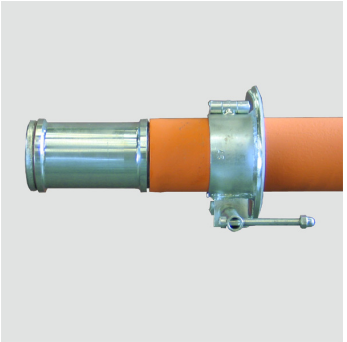

Tubular steel drum shafts, rotating

Cable drum shafts rotating, tubular steel with bearings and recessed ends and 2 clamps

Code	Type	D/L mm	Bearing seat	SWL	kg
314760	KSD 6007	60/1500	D 50x115 mm	to 2,5 t	21,50
314770	KSD 7610	76/1850	D 66x115 mm	to 6,6 t	41,60
314810	KSD 7614	76/2000	D 66x115 mm	to 7,0 t	53,20
314850	KSD 8917	89/2200	D 80x115 mm	to 13,0 t	80,00
314890	KSD 9517	95/2200	D 80x115 mm	to 15,0 t	85,40

Solid alu drum shafts, rotating

Cable drum shafts rotating, solid alu with plain bearings without clamps. Further lengths on request.

The bearings are without recessed ends. These shafts are used for e.g. drum trailers or for any other drum lifting equipment.

Code	Type	D/L mm	Suitable for	Bearing	SWL	kg
3507871	TAS 750	75/1450	KVS 1000	D 76x80 mm	to 5 t	23,00
350789	TAS 752	75/1730	KVS 1500-2000	D 76x80 mm	to 5 t	27,00

Drum shaft suspension

Suspension with shackle only for rotating drum shafts for lifting and unwinding cable drums, without cones.

Below mentioned capacity is per pair. Two are required

Code	Type	Shaft-D	Clamping-D	SWL	kg
315399	WAH 60	60-63 mm	52 mm	3 t	4,00
315400	WAH 76	75-76 mm	67 mm	6 t	5,20
315403	WAH 90	89-101 mm	81 mm	15 t	9,10
315406	WAH 108	108-127 mm	98 mm	28 t	25,00

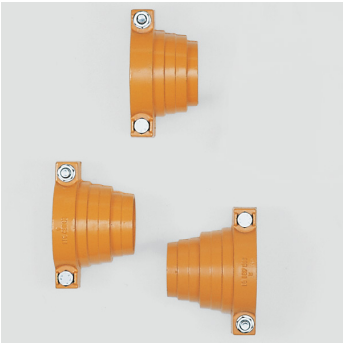

Locating cones

Locating cone for drum shafts made of cast steel including clamp. With several steps for drum bores according to DIN.

Code	Type	Shaft-D	Steps-D	kg
315430	ZKO 76	75-76 mm	90/100/105/125/130/140	5,00
315460	ZKO 90	89-90 mm	100/105/125/130/140	4,80
315490	ZKO 95	94-95 mm	105/125/130/140	4,50

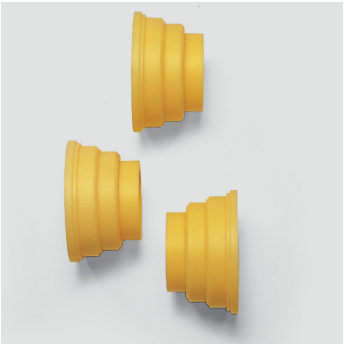

Stepped bushes

Stepped bushes of polyamide for shafts, with steps for drum bores according to DIN.

Code	Type	Shaft-D	Steps-D	kg
315505	ZBP 51	51 mm	80	0,40
315506	ZBP 61	60 mm	80	0,35
315508	ZBP 71	70 mm	92/125/140	1,00
315510	ZBP 76	76 mm	103/125/140	0,90
315515	ZBP 90	90 mm	125/140	0,70
315520	ZBP 95	95 mm	125/140	0,60

Clamps for drum shafts

Clamps, new construction reinforced, hinged, for drum shafts for lateral fixing of the cable drum on drum shafts of steel or alu. Hinged version, steel galvanized. Width 61 mm.

Code	Type	For shaft-D	Width	kg
315030	KSV 51	47-51 mm	61 mm	1,50
315035	KSV 60	60-61 mm	61 mm	1,80
315040	KSV 70	70-71 mm	61 mm	2,00
315045	KSV 76	75-76 mm	61 mm	2,10
315050	KSV 90	89-90 mm	61 mm	2,40
315055	KSV 95	95-96 mm	61 mm	2,60

Loading traverses

Loading traverse for safe lifting and transporting of cable drums. With 2 adjustable steel rope suspensions, suitable for drums acc. table below. Further dimensions are available on short call.

• Expanding construction advantages:
• Telescoping small dimensions for stocking, lightweight.
• Steel profile construction galvanized, complete with rope suspension , without quick-lifting hooks.

Code	Type	Cap.	Drum width	Drum-D	L max.	L min.	kg
317320	KLT 31	3 t	1200-1800	3000	2000	1200	39,00
317322	KLT 51	5 t	1200-1800	3000	2000	1250	64,00
317326	KLT 81	8 t	1200-1800	3000	2000	1280	98,00
317330	KLT 101	10 t	1200-1800	3500	2000	1280	108,00
317334	KLT 121	12 t	1700-2500	4000	2700	1730	174,00
317338	KLT 151	15 t	1700-2500	4500	2700	1730	187,00
317342	KLT 181	18 t	1750-2750	4500	2950	1900	285,00
317346	KLT 211	21 t	1750-2750	4500	2950	1900	296,00

Drum quick lift hooks

Cable drum quick-lift hooks for safe lifting and transporting cable drums if there is no space to insert a long drum shaft. Not suitable to unwind cable drums. Made of steel galvanized.

Below mentioned capacity is per pair. Two are required

Code	Type	Cap.	For hole-D	Tube-D/L	kg
317370	KTH 30	6 t	80-125 mm	76/250 mm	6,40
317400	KTH 50	10 t	90-140 mm	89/295 mm	12,40
317410	KTH 80	16 t	125-140 mm	121/400 mm	19,70

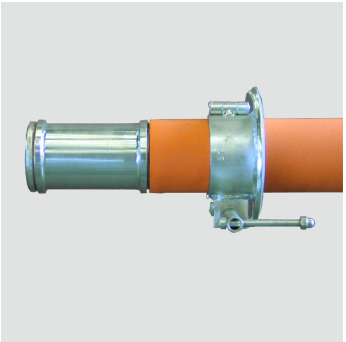

Tubular steel drum shafts, rotating

Cable drum shafts rotating, tubular steel with bearings and recessed ends and 2 clamps

Code	Type	D/L mm	Bearing seat	SWL	kg
314770	KSD 7610	76/1850	D 66x115 mm	to 6,6 t	41,60
314810	KSD 7614	76/2000	D 66x115 mm	to 7,0 t	53,20
314850	KSD 8917	89/2200	D 80x115 mm	to 13,0 t	80,00
314890	KSD 9517	95/2200	D 80x115 mm	to 15,0 t	85,40

Tubular steel drum shafts, rotating

Tubular steel drum shafts, rotating with friction bearings, without clamps, for heavy drum weights and wider drums. Shaft length must be 500 mm longer than the drum width. Especially for application with the THD hydraulic jacks. The load capacities are corresponding to the widest possible drum, for reduced width the capacity decreases significantly. Static calculations are available.

Code	Type	D/L mm	Seat	SWL	kg
031481428	KSDL 11417	114/2500	D 96x115	to 24 t	119,00
031481432	KSDL 11417	114/2800	D 96x115	to 24 t	10,50
031481440	KSDL 11417	114/3000	D 96x115	to 24 t	140,00
031481448	KSDL 11417	114/3200	D 96x115	to 24 t	148,00
031481456	KSDL 11417	114/3300	D 96x115	to 24 t	152,00

Drum shaft suspension

Suspension with shackle only for rotating drum shafts for lifting and unwinding cable drums, without cones.

Below mentioned capacity is per pair. Two are required

Code	Type	Shaft-D	Clamping-D	SWL	kg
315400	WAH 76	75-76 mm	67 mm	6 t	5,20
315403	WAH 90	89-101 mm	81 mm	15 t	9,10
315406	WAH 108	108-127 mm	98 mm	28 t	25,00

Centring bushes for drum shafts D 101-159

Centring bushes for drum shafts to fit with the drum bore, see table below. Also available in other diameters.

Code	Type	Shaft-D	Drum bore	kg
315850	ZB 114/150	114 mm	D 150 mm	15,00
315880	ZB 114/200	114 mm	D 200 mm	15,00

Clamps for drum shafts

Clamp hinged, for drum shafts for lateral fixing of the cable drum on drum shafts of steel or alu. Hinged version, steel galvanized. Width 61 mm.

Code	Type	Shaft-D	kg
315360	KLS 114	114-115 mm	3,00

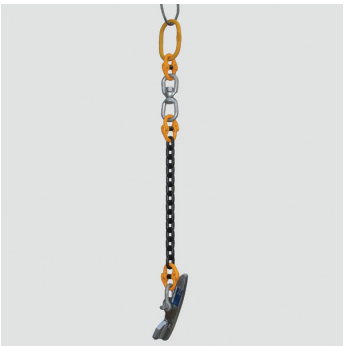

Cable drum lifting shoe

Cable drum lifting shoe. For horizontal lifting of cable drums through one drum centre hole. Chain with swivel and shoe. Total length approx. 1 m.

Code	Type	Cap.	For hole-D	kg
317600	KTK 13	1300 kg	70-90 mm	4,70
317605	KTK 28	2800 kg	100-130 mm	6,50

Rotating drum lifter

Rotating drum lifting unit. For horizontal lifting cable drums through one drum centre hole. Rotating with ball bearings for unwinding cables. When lifting the drum, the gripping arms are folded outwards.

Code	Type	Cap.	For hole-D	kg
317620	KTS 12	1200 kg	75-100 mm	4,44
317625	KTS 22	2200 kg	100-140 mm	8,00
317630	KTS 40	4000 kg	100-140 mm	20,00

Cable uncoiler

Cable uncoiler steel galvanized, with ball-bearings, with 4 adjustable spindles. Used for installation works. For rings of D 100-700 mm. accessory: cable length measuring devices, see table below.

Code	Type	Ring-D	Dimension	SWL	kg
320120	KA 600	100-500	D 600/440	40 kg	7,00
320140	KA 700	250-600	D 700/440	60 kg	15,50
320160	KA 800	250-700	D 800/440	60 kg	18,00

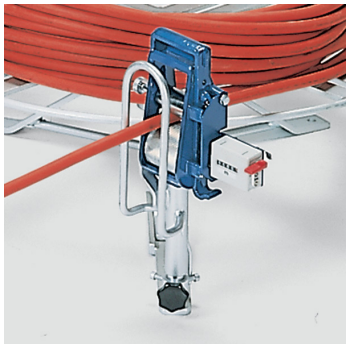

Cable length meters

Cable and line length meter for KA 700-800, counter up to 999,99,99 m, accuracy ± 0,8 %.

Code	Type	Suitable for	C-D	St-rope	kg
320240	KL 21	KA 700-800	3-21	no	3,40
320245	KL 21S	KA 700-800	3-21	3-12	3,50
320250	KL 50	KA 700-800	3-50	no	4,20
320255	KL 50S	KA 700-800	3-50	3-22	4,20

Cable unwinder

Cable unwinder for small drums, even with damaged flanged wheels for electric installation works. Tubular steel construction galvanized. Consisting of: basic frame with 2 rubber coated wheels, one drum shaft D 25 mm with 2 cones of polyamide for hole diameter 25-80 mm.

- Collapsible for easy transportation to the site.
- Easy movable with the drum through big rubber coated wheels.
- For drum-D up to 800 mm and drum widths up to 530 mm, drum weight max. 200 kg
- As accessory steel tube drum shaft D 50, ball bearings, 2 clamps, for cones see table below.

Code	Type	Equipment	Shaft-D	Cones for	kg
320290	KTA 8	Unwinder as above	25 mm	Holes D 25-80	11,60
320292	KTA 8W	Steel tube drum shaft	50 mm	See next line	2,05
315504	ZKP 50-80	Polyamide cones	50 mm	Holes-D 50-80	0,15
3155045	ZKP 50-108	Polyamide cones	50 mm	Holes-D 50-108	0,20

Cable drum tipping stand

Cable drum tipping stands. Simple drum unwinding equipment at installation works. Excellent tipping leverage due to optimum positioning of centre of gravity. Capable of lifting heavy loads. Tubular steel construction galvanized.

Code	Type	For drum-D	Max.	Int. width	kg
320300	KW 6-8	600-800	300 kg	600 mm	13,00
320320	KW 6-10	600-1000	500 kg	700 mm	22,00
320330	KW 6-12	600-1250	800 kg	930 mm	38,00

Stepped bushes

Stepped bushes of polyamide for shaft-D 48, one step D 80, for drum tipping stands KW 6-12.

Code	Type	For shaft	For drum bore	kg
315503	ZBP 48	D 48 mm	D 80 mm	0,45

Drum unwinding stand for FOC

Drum unwinding stand for FOC or subduct drums, galvanized. Equipped with a lightweight aluminium shaft D 75 mm with drum shaft securing and 2 clamps.

- Sturdy steel construction, hot galvanized, easy dismountable by hand for transportation.
- Two crank spindles to lift the stand for unwind cables in any position.
- High stability under load even in uneven places.
- For drum-D up to 1400 mm and drum width up to 900 mm, max. weight 500 kg.
- As accessory alu-drum shaft D 50, ball bearings, order clamps and cones separately, see table below.
- Dimensions mounted: L/W/H 1450/1400/689 mm.

Code	Type	Equipment	Shaft-D	Cones for	kg
344355	TRG 1140	Unwinder as above	75 mm	Holes D 80	96,00
350592	TAK 5013	Alu drum shaft	50 mm	See next line	7,40
315030	KSV 51	Shaft clamps	50 mm	For TAK 5013	1,50
315504	ZKP 50-80	Polyamide cones	50 mm	Holes-D 50-80	0,15
3155045	ZKP 50-108	Polyamide-cones	50 mm	Holes-D 50-108	0,20

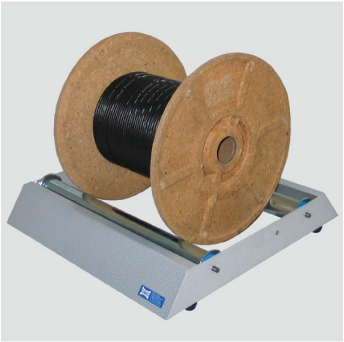

Drum wind off roller

Cable drum wind-off roller for cables or ropes. Steel construction, powder coated. Steel rollers galvanized with ball bearings.

- Rollers adjustable for smaller spools down to Ø 100 mm
- Rubber feet for stable and quiet running

Code	Type	For drum-D	Drum width	SWL	L/W/H mm	kg
320660	KTA 7	100-1200 mm	max. 500 mm	150 kg	530/550/110	8,80

Drum wind off roller

Cable drum wind-off roller, alu chassis with adjustable alu-rollers with ball bearings. Two required. Techn. Details see table below.

Code	Type	Support	Wooden drum-D	Steel drum-D	kg
320710	KTA 2A	Alu	400-1000/kg 500	400-1600/kg 1000	8,20