Mini conduit rod

Cord blowing equipment

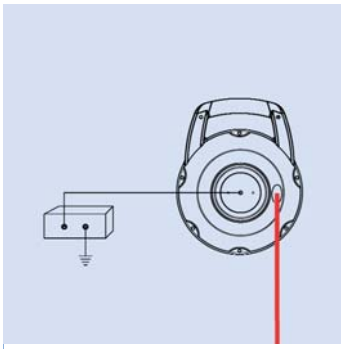

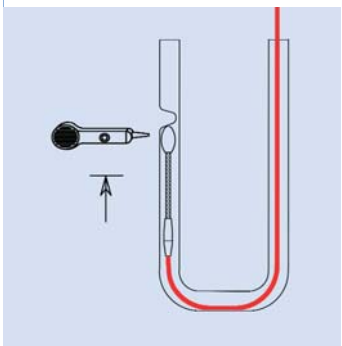

Vetter GmbH
Kabelverlegetechnik

Mini-conduit rods yellow, D 3,0 mm

Mini-conduit detecting rods red, D 3,0 mm

Accessory and using parts to all mini-rods

Nylon and steel pull-in tapes D 4 mm

Conduit rods yellow, D 4,5-6,5 mm

Accessory and using parts to conduit rods D 4,5-6,5 mm

Detecting conduit rods red, D 4,5 mm

Cord blowing equipment for in-house installation

Vetter GmbH Kabelverlegetechnik • Industriestrasse 28 • D-79807 Lottstetten
Tel.: +49 7745/9293-0 • Fax +49 7745/9293-499 • info@vetter-kabel.de • www.vetter-kabel.de

Mini-rod yellow

Mini-rod yellow. Highest quality of reinforced fibre rod with PP-covering. Cable pull-in tool complete equipped in plastic housing. Rod-D 3,0 mm, without copper conductors, not for detection, see red Mini-rods. Packed in single box.

The core of this rod is reinforced by 10 % additional glass fibres. This leads to a higher pushing stability especially in ducts M 20. Furthermore the breaking resistance is higher. The following accessory is supplied with the Mini Rod:

• 1 Spring guided tip D 7 and 1 pc. D 10 mm.
• 1 cable grip with brass eye for cable-D 6- 9 mm.
• 1 Pulling rubber disc D 75 mm.
• 1 Service-set different parts with instruction.

Code	Type	D/m	Housing	Carton	kg
211004	RS 3-30	3/30	320x250x80	350x290x90	1,26
211006	RS 3-50	3/50	320x250x80	350x290x90	1,50

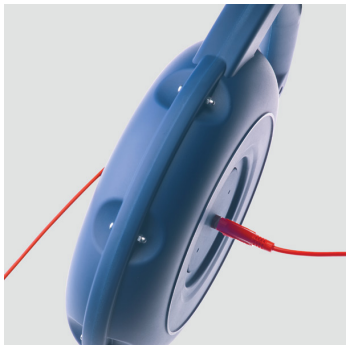

Mini-rod red

Mini-rod red, highest quality of reinforced fibre rod with PP-covering. Cable pull-in tool complete equipped in plastic housing. Rod-D 3,0 mm, with copper conductors for detection. Packed in single box.

The core of this rod is reinforced by 10 % additional glass fibres. This leads to a higher pushing stability especially in ducts M 20. Furthermore the breaking resistance is higher. The following accessory is supplied with the Mini Rod:

• 1 Spring guided tip D 7 and 1 pc. D 10 mm.
• 1 cable grip with brass eye for cable-D 6- 9 mm.
• 1 Pulling rubber disc D 75 mm.
• 1 Service-set different parts with instruction.

Code	Type	D/m	Housing	Carton	kg
211031	ORS 3-30	3/30	320x250x80	350x290x90	1,30
211033	ORS 3-50	3/50	320x250x80	350x290x90	1,50

Spare mini rod yellow

Spare mini-rod yellow, highest quality of reinforced fibre rod with PP-covering. D 3,0 mm, without copper conductors, not for detection, see red Mini-rods. Ring with 1 spring guiding head D 10 mm.

The core of this rod is reinforced by 10 % additional glass fibres. This leads to a higher pushing stability especially in ducts M 20. Furthermore the breaking resistance is higher. The following accessory is supplied with the Mini Rod:

Code	Type	D/m	Ring-D	kg
211012	ES 3-30	3/30	230x35	0,47
211014	ES 3-50	3/50	230x35	0,68

Spare mini rod red

Spare mini-rod red, highest quality of reinforced fibre rod with PP-covering, D 3,0 mm, with copper conductors for detection. Ring with 1 spring guiding head D 10 mm.

The core of this rod is reinforced by 10 % additional glass fibres. This leads to a higher pushing stability especially in ducts M 20. Furthermore the breaking resistance is higher. The following accessory is supplied with the Mini Rod:

Code	Type	D/m	Ring-D	kg
211039	OES 3-30	3/30	230x35	0,46
211041	OES 3-50	3/50	230x35	0,66

Accessories

Pulling disc of rubber for safe and careful pulling of the mini-rods.

Code	Type	D	For RS	kg
226290	MBZ 75	75 mm	D 3-12 mm	0,05

Lubricant for indoor installation

Lubricant gel like, for smaller indoor installation cables, in battle. Up to 80 % friction reducing.

For lubrication unique and ultimate classification, Water pollution class - non-hazardous, acc. to VCI-Conception. Safety data sheets are available.

Code	Type	Package	Quantity	kg
235100	J-19V	Bag	0,56 l	0,60
235130	J-35V	Bottle	0,95 l	1,00

Accessories

Guide tip with spring for mini-rods, length 87 mm, light tip of alu, for easy sliding through the ducts.

Code	Type	Set of	Thread	kg
226300	RFK 7	3 pcs. D 7	M 5	0,13
226302	RFK 10	3 pcs. D 10	M 5	0,13
226308	RFK 71	1 piece D 7 + 1 piece D 10	M 5	0,09

Accessories

Pulling eyes for all mini-rods of D 3 mm, set of 3 pcs.

Code	Type	Pull eye-D	Thread	kg
226310	RZO 6	6 mm	M 5	0,04

Accessories

Pulling eyes for all mini-rods of D 3 mm, set of 3 pcs.

Code	Type	Cable-D	Thread	kg
226312	RZS 6	4-6 mm	M 5	0,02
226313	RZS 9	6-9 mm	M 5	0,02
226314	RZS 12	9-12 mm	M 5	0,02
226315	RZS 15	12-15 mm	M 5	0,03

Service-Set

Service-Set for all mini-rods D 3 mm, yellow and red, consisting of:

- 3 brass sockets
- 2 brass connecting sleeves
- 2 brass pulling eyes
- 1 high strength mixed adhesive
- 1 Instruction

Code	Type	Suitable for	kg
226476	RPS 3	all mini rods	0,10

Perlon pull-in tape D 4 mm

Perlon pull-in tape D 4 mm, with leading spring and eye on both ends, ring packed in bag.

Code	Type	Length	kg
227802	PEB 405	5 m	0,09
227804	PEB 410	10 m	0,15
227806	PEB 415	15 m	0,21
227808	PEB 420	20 m	0,27
227810	PEB 425	25 m	0,34

Steel pull-in tape D 4 mm

Steel pull-in tape D 4 mm with pulling eye, ring packed in bag.

Code	Type	Length	kg
227842	SSP 405	5 m	0,37
227844	SSP 410	10 m	0,70
227846	SSP 415	15 m	1,03
227848	SSP 420	20 m	1,36
227850	SSP 425	25 m	1,70

Conduit rods

Conduit rod, highest quality of reinforced fibre rod with PP-covering. For pushing through conduits and pulling-in of winch ropes or light cables. On galvanized reel with safety brake. Including guide tip of aluminium D 11/M5.

The core of this rod is reinforced by 27 % additional glass fibres. This leads to a higher pushing stability and also to higher breaking resistance.

Code	Type	D/m	Alu-tip-D	Reel-D	Duct-ID	kg
211090	RS 4,5-40	4,5/40	11/M5	350 mm	up to 50	3,70
211130	RS 4,5-60	4,5/60	11/M5	350 mm	up to 50	4,30
211170	RS 4,5-80	4,5/80	11/M5	350 mm	up to 50	4,90

Vetter GmbH Kabelverlegetechnik • Industriestrasse 28 • D-79807 Lottstetten
Tel.: +49 7745/9293-0 • Fax +49 7745/9293-499 • info@vetter-kabel.de • www.vetter-kabel.de

Conduit rods

Conduit rod, highest quality of reinforced fibre rod with PP-covering. For pushing through conduits and pulling-in of winch ropes or light cables. On galvanized reel with safety brake. Including guide tip of aluminium D 12/M8.

The core of this rod is reinforced by 27 % additional glass fibres. This leads to a higher pushing stability and also to higher breaking resistance.

Code	Type	D/m	Alu-tip-D	Reel-D	Duct-ID	kg
213523	RS 6,5-40	6,5/40	12/M8	600 mm	up to 60	7,10
213563	RS 6,5-60	6,5/60	12/M8	600 mm	up to 60	8,10
213603	RS 6,5-80	6,5/80	12/M8	600 mm	up to 60	9,10

Spare rods, without reel

Spare conduit rod yellow, without reel, highest quality of reinforced fibre rod with PP-covering. On ring with alu guide tip.

The core of this rod is reinforced by 27 % additional glass fibres. This leads to a higher pushing stability and also to higher breaking resistance.

Code	Type	D/m	Alu-tip-D	kg
211590	ES 4,5-40	4,5/40	11/M5	1,25
211630	ES 4,5-60	4,5/60	11/M5	1,85
211670	ES 4,5-80	4,5/80	11/M5	2,45
214523	ES 6,5-40	6,5/40	12/M8	2,10
214563	ES 6,5-60	6,5/60	12/M8	3,10
214603	ES 6,5-80	6,5/80	12/M8	4,10

Set of screw and joint brass sockets

Set of screw and joint brass sockets with adhesive for rods

Code	Type	For RS	Sleeves	kg
226500	RPS 4	RS 4,5	3 screw, 2 joint sockets	0,09
226530	RPS 6	RS 6,5	1 screw, 1 joint socket	0,07

Screw brass sockets

Screw brass socket with thread for conduit rods

Code	Type	Thread	For RS	OD/L	kg
226480	RPA 4	M 5	RS 4,5	6/18 mm	0,01
226510	RPA 6	M 8	RS 6,5	9/45 mm	0,02

Joint brass sockets

Joint brass socket, without adhesive, for conduit rods

Code	Type	For RS	OD/L	kg
226490	RPV 4	RS 4,5	6/24 mm	0,01
226520	RPV 6	RS 6,5	9/50 mm	0,02

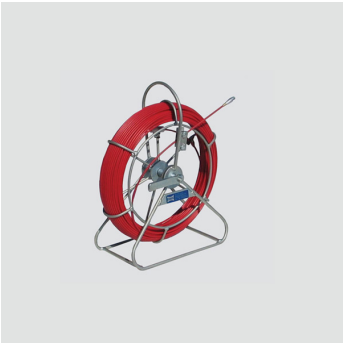

Detecting rods

Detecting red conduit rods, highest quality of reinforced fibre rod with PP-covering. With alu-tip. For route detection with copper conductors, on galvanized reel with safety brake. Can also be used for pulling-in of winch ropes or light cables. Including connector for micro-transmitter with thread M5.

The core of this rod is reinforced by 27 % additional glass fibres. This leads to a higher pushing stability and also to higher breaking resistance.

Code	Type	D/m	Alu-tip-D	Reel-D	CU-Cond.	Duct-ID	kg
225003	ORS 4,5-40	4,5/40	11/M5	350 mm	4	up to 50	3,80
225005	ORS 4,5-60	4,5/60	11/M5	350 mm	4	up to 50	4,40
225007	ORS 4,5-80	4,5/80	11/M5	350 mm	4	up to 50	5,00

Spare detecting rods

Spare detecting rod red, highest quality of reinforced fibre rod with PP-covering, with copper conductors for detection. Including connector for transmitter.

The core of this rod is reinforced by 27 % additional glass fibres. This leads to a higher pushing stability and also to higher breaking resistance.

Code	Type	D/m	Alu-tip-D	CU-Cond.	kg
225011	OES 4,5-40	4,5/40	11/M5	4	1,25

225013	OES 4,5-60	4,5/60	11/M5	4	1,90
225015	OES 4,5-80	4,5/80	11/M5	4	2,50

Service-Set for detecting rods

Service-set for detecting rods ORS, 1 screw socket and 1 joint socket, with adhesive.

Code	Type	For ORS	Sleeves	kg
225321	RPO 4	D 4,5	3 screw, 2 joint sockets	0,11

Cord blowing equipment

Kabelblitz - pneumatic cord blowing-in equipment for cable installations. With the blown cords cables can be pulled in. Complete set for pipes PG 11-36, with 3 spools of plastic cord, in plastic case

- The Kabelblitz overcomes the most complicated conduits even with many bends.
- Constriction in the pipe are easily overcome due to the elastic darts.
- A small compressor of max. 2-3 bar is enough.
- In a case all necessary parts are included, except the compressor.

Code	Type	For duct	Compressed air	Case	kg
282020	KB 3	M 16-50	max. 2-3 bar	450x360x260	6,20

Plastic cord spools

Spools of plastic cord for Kabelblitz. Minimum order at least 3 spools.

Code	Type	Cord-D	Length/spool	Breaking	kg
282240	KS 600	approx. 2 mm	600 m	approx. 22 daN	0,40

Darts for Kabelblitz

Darts for the cord blowing tool - Kabelblitz, sizes see table below.

Code	Type	Duct-ID	Min. quantity	kg
282410	KPF 10	10-12 mm	5 pcs.	0,01
282440	KPF 20	13-15 mm	5 pcs.	0,01
282475	KPF 32	20-23 mm	5 pcs.	0,01
282505	KPF 42	22-30 mm	5 pcs.	0,01
282535	KPF 52	31-36 mm	3 pcs.	0,02

Tube connector for Kabelblitz

Tube connector bent, for cord blowing tool - Kabelblitz, sizes see table below.

Code	Type	For duct	kg
282720	KAG 9	D 9-15 mm	0,10
282740	KAG 16	D 16-20 mm	0,10
282760	KAG 21	D 20-25 mm	0,10
282780	KAG 29	D 28-40 mm	0,20
282800	KAG 36	D 40-50 mm	0,30

Vetter GmbH Kabelverlegetechnik • Industriestrasse 28 • D-79807 Lottstetten
Tel.: +49 7745/9293-0 • Fax +49 7745/9293-499 • info@vetter-kabel.de • www.vetter-kabel.de